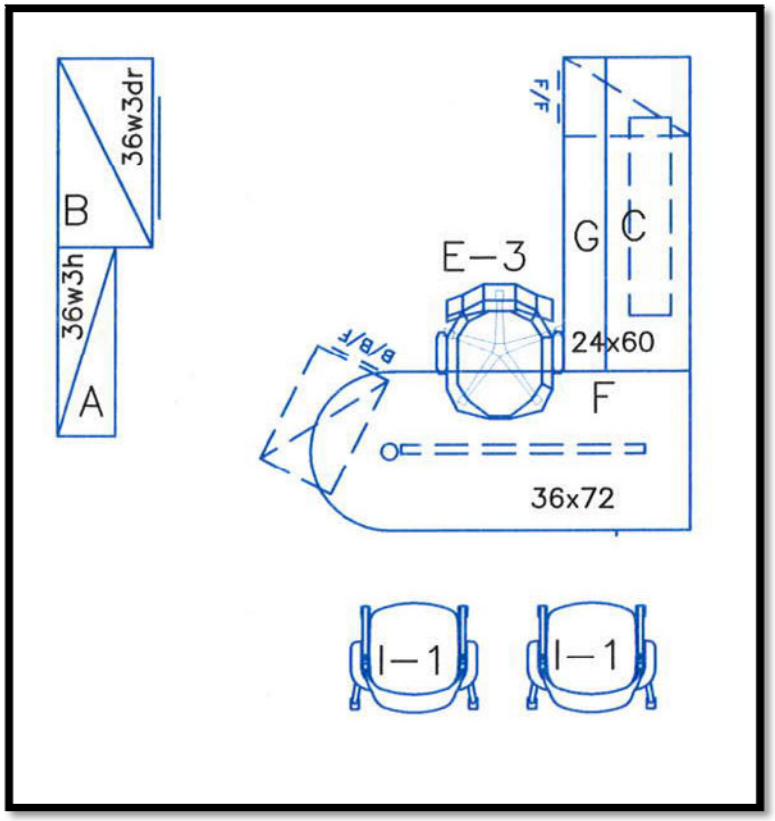

Item	Qty	
F	1	36 x 72 Laminate "p" top, w/metal mobile B/B/F, modesty, and grommet
G	1	24 x 60 laminate Return w/metal F/F, 1/2 modesty and one grommet.
C	1	15 x 60 x 35 metal Hutch Unit w/doors, task light, and tackboard, middle grade fabric
B	1	36 w 3 dr high metal lateral file
A	1	36 w 3 high metal bookcase
E-2	1	Mid back desk chair, pneu ht, adj. arms, swivel tilt, seat slide, middle grade fabric
I-1	2	Ptd. Metal slide chair w/arms, fabric seat and back, stackable, middle grade fabric

Estimates

Haworth - $3,000

Steelcase - $2,600